Work Order ID 64086

Wednesday, November 24, 2010 8:48:53 AM

Item ID: D3594-5 **Accept** **Setup** **Start** **Stop**

Revision ID:

Item Name: Door Doubler

Start Date: 11/24/2010 **Start Qty:** 10.00 **Cust Item ID:**

Required Date: 11/30/2010 **Req'd Qty:** 10.00 **Customer:**

Reference:

Approvals: **Process Plan:** M **Date:** 10-11-24 **Tooling:** _____ **Date:** _____ **Run** **Start** **Stop**

QC: _____ **Date:** _____ **SPC (Y/N):** _____ **Date:** _____

Sequence ID/ Work Center ID	Operation Description	Set Up/ Run Hours	Tool ID	Tool #	Plan Code	Accept Qty	Reject Qty	Reject Number	Insp. Stamp

Draw Nbr	Revision Nbr
D3594	Rev B

Sequence ID/ Work Center ID	Operation Description	Set Up/ Run Hours	Tool ID	Tool #	Plan Code	Accept Qty	Reject Qty	Reject Number	Insp. Stamp
100 Waterjet FLOW CNC Waterjet 6061 .080	FLOW WATER JET **Memo** 1-Cut as per Dwg D3594 ☐Dwg Rev: B ☐Prog Rev: B ☐2-Deburr if necessary	0.00 0.00				B10-11-29		(14)	
110 QC Quality Control	QC2- Inspect parts off machine FAI/FAIB **Memo**	0.00 0.00				B10-11-29			
120 QC Quality Control	QC8- Inspect parts - second check **Memo**	0.00 0.00 S 10/11/29				X14			

Dart Aerospace Ltd

W/O:		WORK ORDER CHANGES					
DATE	**STEP**	**PROCEDURE CHANGE**	**By**	**Date**	**Qty**	**Approval** Chief Eng / Prod Mgr	**Approval** QC Inspector

Part No: _____ **PAR #:** _____ **Fault Category:** _____ **NCR:** Yes No **DQA:** _____ **Date:** _____

Resolution: _____ **Disposition:** _____ **QA: N/C Closed:** _____ **Date:** _____

NCR:		WORK ORDER NON-CONFORMANCE (NCR)						
DATE	**STEP**	**Description of NC** Section A	**Corrective Action** Section B			**Verification** Section C	**Approval** Chief Eng	**Approval** QC Inspector
			Initial Chief Eng	**Action Description** Chief Eng	**Sign & Date**			

NOTE: Date & initial all entries

H:\fFORMS\Quality Assurance\approved QA\NCRWO RevE

Work Order ID 64086

Wednesday, November 24, 2010 8:48:53 AM

Item ID: D3594-5 **Accept** **Setup Start**

Revision ID:

Item Name: Door Doubler **Stop**

Start Date: 11/24/2010 **Start Qty:** 10.00 **Cust Item ID:**

Required Date: 11/30/2010 **Req'd Qty:** 10.00 **Customer:**

Reference:

Approvals: **Process Plan:** _____ **Date:** _____ **Tooling:** _____ **Date:** _____ **Run Start**

QC: _____ **Date:** _____ **SPC (Y/N):** _____ **Date:** _____ **Stop**

Sequence ID/ Work Center ID	Operation Description	Set Up/ Run Hours	Tool ID	Tool #	Plan Code	Accept Qty	Reject Qty	Reject Number	Insp. Stamp
130 Small Fab Small Fab	Small Fab	0.00							
	Memo 1-C'SINK AS [PER dwg d3594	0.00							
140 QC Quality Control	QC5- Inspect part completeness to step on W/O	0.00							
	Memo	0.00							
150 HandFinish Hand Finishing	Chemical Conversion Coat per QSI005 4.1	0.00							
	Memo	0.00							

Dart Aerospace Ltd

W/O:		WORK ORDER CHANGES					
DATE	**STEP**	**PROCEDURE CHANGE**	**By**	**Date**	**Qty**	**Approval** Chief Eng / Prod Mgr	**Approval** QC Inspector

Part No: _____ **PAR #:** _____ **Fault Category:** _____ **NCR:** Yes No **DQA:** _____ **Date:** _____

Resolution: _____ **Disposition:** _____ **QA: N/C Closed:** _____ **Date:** _____

NCR:		WORK ORDER NON-CONFORMANCE (NCR)						
DATE	**STEP**	**Description of NC** Section A	**Corrective Action** Section B			**Verification** Section C	**Approval** Chief Eng	**Approval** QC Inspector
			Initial Chief Eng	**Action Description** Chief Eng	**Sign & Date**			

NOTE: Date & initial all entries

H:\fFORMS\Quality Assurance\approved QA\NCRWO RevE

Work Order ID 64086

Wednesday, November 24, 2010 8:48:53 AM

Item ID: D3594-5 **Accept** **Setup Start**

Revision ID:

Item Name: Door Doubler **Stop**

Start Date: 11/24/2010 **Start Qty:** 10.00 **Cust Item ID:**

Required Date: 11/30/2010 **Req'd Qty:** 10.00 **Customer:**

Reference:

Approvals: **Process Plan:** _____ **Date:** _____ **Tooling:** _____ **Date:** _____ **Run Start**

QC: _____ **Date:** _____ **SPC (Y/N):** _____ **Date:** _____ **Stop**

Sequence ID/ Work Center ID	Operation Description	Set Up/ Run Hours	Tool ID	Tool #	Plan Code	Accept Qty	Reject Qty	Reject Number	Insp. Stamp
160	QC3- Inspect Part Finish	0.00				14	BR	10-11-30.	
QC Quality Control	Memo	0.00							
170	Identify as per dwg & Stock Location 234A	0.00				10/11/30	14		
Packaging Packaging	Memo	0.00							
180	QC21- Final Inspection - Work Order Release	0.00				CK	10/12/01		
QC Quality Control	Memo	0.00				MF 10-11-30			

Dart Aerospace Ltd

W/O:		WORK ORDER CHANGES					
DATE	**STEP**	**PROCEDURE CHANGE**	**By**	**Date**	**Qty**	**Approval** Chief Eng / Prod Mgr	**Approval** QC Inspector

Part No: _____ **PAR #:** _____ **Fault Category:** _____ **NCR:** Yes No **DQA:** _____ **Date:** _____

Resolution: _____ **Disposition:** _____ **QA: N/C Closed:** _____ **Date:** _____

NCR:		WORK ORDER NON-CONFORMANCE (NCR)						
DATE	**STEP**	**Description of NC** Section A	**Corrective Action** Section B			**Verification** Section C	**Approval** Chief Eng	**Approval** QC Inspector
			Initial Chief Eng	**Action Description** Chief Eng	**Sign & Date**			

NOTE: Date & initial all entries

Picklist Print

Wednesday, November 24, 2010 8:48:58 AM

Work Order ID: 64086

Parent Item: D3594-5

Parent Item. Name: Door Doubler

Start Date: 11/24/2010 **Required Date:** 11/30/2010

Start Qty: 10.00 **Required Qty:** 10.00

Comments: IPP Rev :A New Issue 08.07.07 EC verified by DD

Component Item ID/ Item Name	Replacement Item ID	Mfg/ Purch	Bin Item	Primary Location	Last Location	Route Seq ID	Unit of Measure	Qty on Hand	Qty per Kit	Total Qty	Qty Issued	Date Issued	Status
M6061T6S.080		Purchased	No			100	sf	7.8150	0.055	0.578947			
6061-T6 .080 Sheet													

Location	Loc Qty	Loc Code
MAT	7.815	
115689	7.815	

112763

112763

Dart Aerospace Ltd

W/O:		WORK ORDER CHANGES					
DATE	**STEP**	**PROCEDURE CHANGE**	**By**	**Date**	**Qty**	**Approval** Chief Eng / Prod Mgr	**Approval** QC Inspector

Part No: _____ **PAR #:** _____ **Fault Category:** _____ **NCR:** Yes No **DQA:** _____ **Date:** _____

Resolution: _____ **Disposition:** _____ **QA: N/C Closed:** _____ **Date:** _____

NCR:		WORK ORDER NON-CONFORMANCE (NCR)						
DATE	**STEP**	**Description of NC** Section A	**Corrective Action** Section B			**Verification** Section C	**Approval** Chief Eng	**Approval** QC Inspector
			Initial Chief Eng	**Action Description** Chief Eng	**Sign & Date**			

NOTE: Date & initial all entries

DART AEROSPACE LTD	Work Order:	42084
Description: Door Doubler	Part Number:	D3594-5
Inspection Dwg: D3594 **Rev:** B		Page 1 of 1

FIRST ARTICLE INSPECTION CHECKLIST

[X] First Article [ ] Prototype

Drawing Dimension	Tolerance	Actual Dimension	Accept	Reject	Method of Inspection	Comments
Ø0.323	+0.006/-0.001	.325	✓		V 1302	
Ø0.128	+0.005/-0.001	.130	✓		V	
2.57	+/-0.030	2.569	✓		V	
1.000	+/-0.010	1.000	✓		V	
1.000	+/-0.010	1.000	✓		V	
0.530	+/-0.010	.531	✓		V	
R0.13	+/-0.030	.13	✓		R.G.	

Measured by:		Audited by:		Prototype Approval:	N/A
Date:	10-11-24	Date:	10/a/24	Date:	N/A

Rev	Date	Change	Revised by	Approved
A	08.07.24	New Issue	KJ/DD	

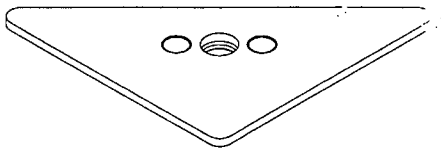

D3594-041 DOOR DOUBLER ASSEMBLY

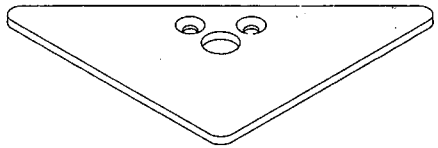

D3594-5 DOOR DOUBLER

SHOP COPY
RETURN TO
ENGINEERING
UNCONTROLLED COPY
SUBJECT TO AMENDMENT
WITHOUT NOTICE
WORK ORDER
NO. 44086
BJ 10-11-24

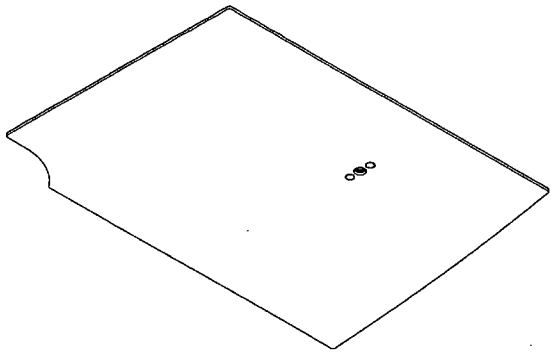

D3594-043 FLOOR DOUBLER ASSEMBLY

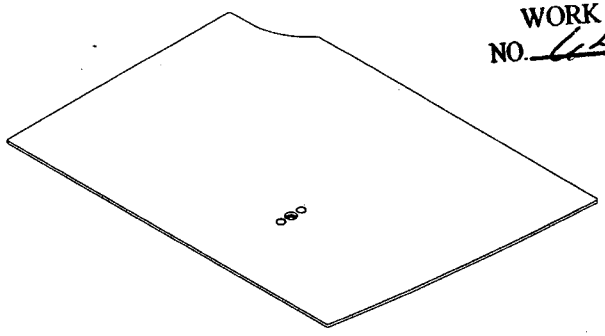

D3594-044 FLOOR DOUBLER ASSEMBLY

RELEASED
08.08.26 MP

REV.	DESCRIPTION	BY	DATE
B	REFORMAT TO B SIZE DRAWING. SHEET 2 ADD -5.	AJS	08.05.14
A	NEW ISSUE	MB	07.04.13

DESIGN	MB	DART AEROSPACE LTD HAWKESBURY, ONTARIO, CANADA
DRAWN	AJS	
CHECKED		DRAWING NO. D3594 REV. B
MFG. APPR.		SHEET 1 OF 4
APPROVED		TITLE DOUBLER SCALE NTS
DE APPR.		
DATE	08.05.14	

COPYRIGHT © 2007 BY DART AEROSPACE LTD
THIS DOCUMENT IS PRIVATE AND CONFIDENTIAL AND IS SUPPLIED ON THE EXPRESS CONDITION THAT IT IS NOT TO BE USED FOR ANY PURPOSE OR COPIED OR COMMUNICATED TO ANY OTHER PERSON WITHOUT WRITTEN PERMISSION FROM DART AEROSPACE LTD

QTY. -041	PART NUMBER	DESCRIPTION
X	D3594-041	DOOR DOUBLER ASSEMBLY
1	D3594-1	DOOR DOUBLER
1	MS21069L5	ANCHOR NUT
2	MS20426AD4-4	RIVET, CSK

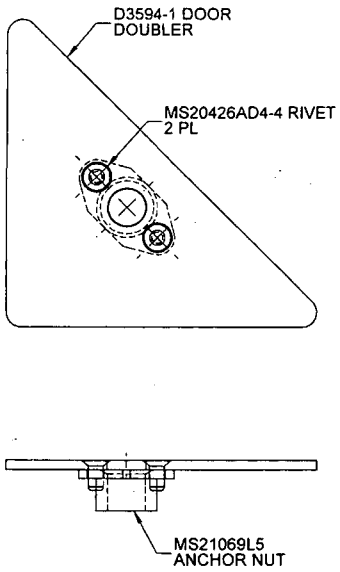

4 D3594-041 DOOR DOUBLER ASSEMBLY

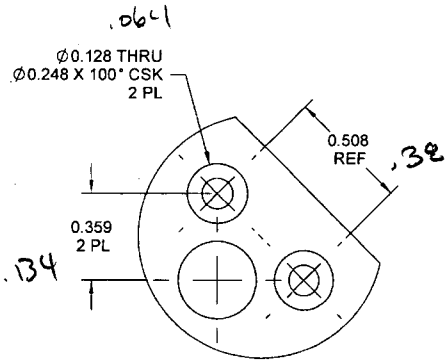

DETAIL A
SCALE 2X

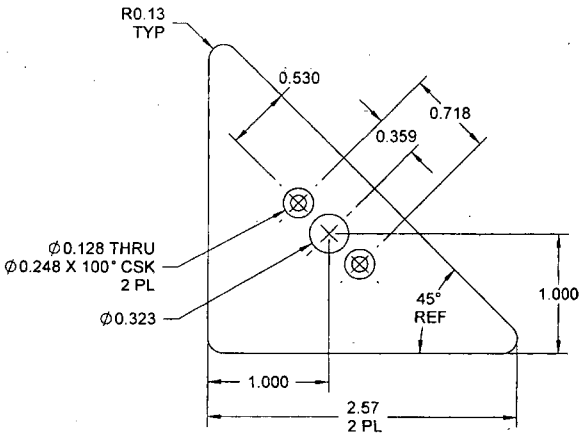

D3594-1 DOOR DOUBLER

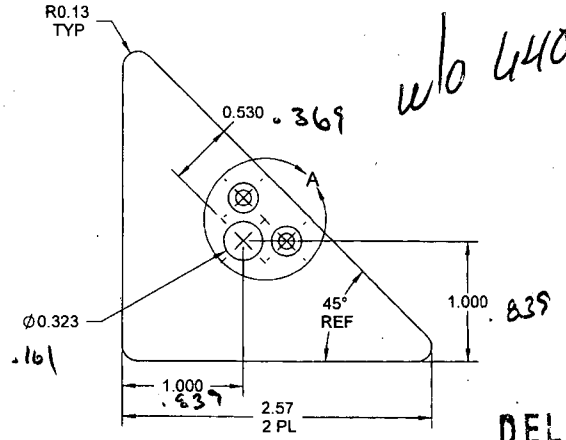

w/o 44084

5 D3594-5 DOOR DOUBLER B

RELEASED
08.06.26

NOTES:
1) MATERIAL: -1 & -5
6061-T6 (OR 6061-T62) ALUMINUM SHEET, 0.080 THICK, PER AMS-QQ-A-250/11 OR AMS 4025 OR AMS 4027 (REF. DART SPEC. M6061T6S.080)
2) FINISH: CHEMICAL CONVERSION COAT PER DART QSI 005 4.1
3) TOLERANCES ARE PER DART QSI 018 UNLESS OTHERWISE NOTED
4) IDENTIFY WITH DART P/N "D3594-041" USING FINE POINT PERMANENT INK MARKER
5) IDENTIFY WITH DART P/N "D3594-5" USING FINE POINT PERMANENT INK MARKER
6) ALL DIMENSIONS ARE IN INCHES UNLESS OTHERWISE NOTED
7) BREAK ALL SHARP EDGES 0.005 TO 0.010 MAX
7) WEIGHT -041: 0.04 lbs
-5: 0.03 lbs

DESIGN	MB	DART AEROSPACE LTD HAWKESBURY, ONTARIO, CANADA
DRAWN	AUS	
CHECKED		DRAWING NO. D3594 REV. B
MFG. APPR.		SHEET 2 OF 4
APPROVED		TITLE DOUBLER SCALE NTS
DE APPR.		
DATE	08.05.14	

COPYRIGHT © 2007 BY DART AEROSPACE LTD
THIS DOCUMENT IS PRIVATE AND CONFIDENTIAL AND IS SUPPLIED ON THE EXPRESS CONDITION THAT IT IS NOT TO BE USED FOR ANY PURPOSE OR COPIED OR COMMUNICATED TO ANY OTHER PERSON WITHOUT WRITTEN PERMISSION FROM DART AEROSPACE LTD

QTY. -043	QTY. -044	PART NUMBER	DESCRIPTION
X		D3594-043	FLOOR DOUBLER ASSEMBLY, LH
	X	D3594-044	FLOOR DOUBLER ASSEMBLY, RH
1		D3594-3	FLOOR DOUBLER, LH
	1	D3594-4	FLOOR DOUBLER, RH
1	1	MS21069L5	ANCHOR NUT
2	2	MS20426AD4-4	RIVET, CSK

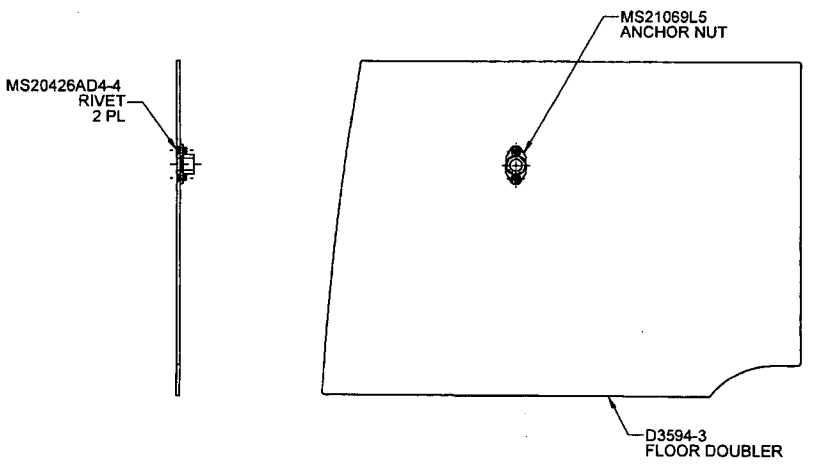

D3594-043 FLOOR DOUBLER ASSEMBLY

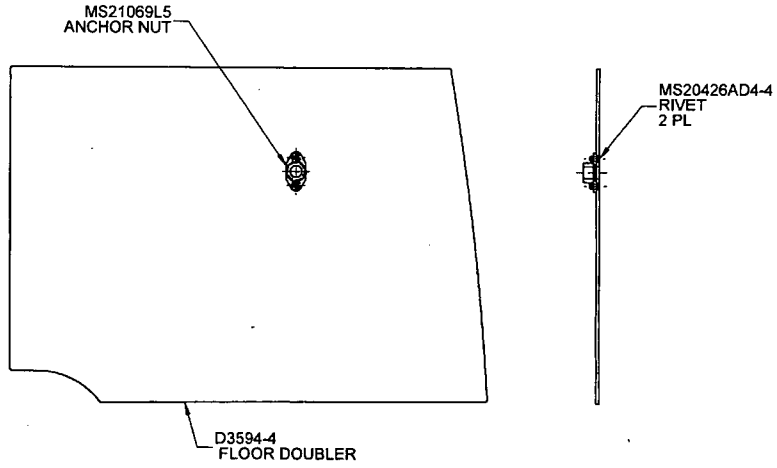

D3594-044 FLOOR DOUBLER ASSEMBLY

RELEASED 08.06.26

NOTES:
1) MATERIAL: -3 & -4
6061-T6 (OR 6061-T62) ALUMINUM SHEET, 0.080 THICK,
PER AMS-QQ-A-250/11 OR AMS 4025 OR AMS 4027
(REF. DART SPEC. M6061T6S.080)
2) FINISH: CHEMICAL CONVERSION COAT PER DART QSI 005 4.1
3) TOLERANCES ARE PER DART QSI 018 UNLESS OTHERWISE NOTED
4) IDENTIFY WITH DART P/N "D3594-043/-044" USING FINE POINT PERMANENT INK MARKER
5) ALL DIMENSIONS ARE IN INCHES UNLESS OTHERWISE NOTED
6) BREAK ALL SHARP EDGES 0.005 TO 0.010 MAX
7) WEIGHT -043 & -044: 0.80 lbs

w/o 44086

DESIGN	MB	**DART AEROSPACE LTD** HAWKESBURY, ONTARIO, CANADA
DRAWN	AJS	
CHECKED		DRAWING NO. D3594 — REV. B — SHEET 3 OF 4
MFG. APPR.		
APPROVED		TITLE DOUBLER — SCALE NTS
DE APPR.		
DATE	08.05.14	

COPYRIGHT © 2007 BY DART AEROSPACE LTD
THIS DOCUMENT IS PRIVATE AND CONFIDENTIAL AND IS SUPPLIED ON THE EXPRESS CONDITION THAT IT IS NOT TO BE USED FOR ANY PURPOSE OR COPIED OR COMMUNICATED TO ANY OTHER PERSON WITHOUT WRITTEN PERMISSION FROM DART AEROSPACE LTD.

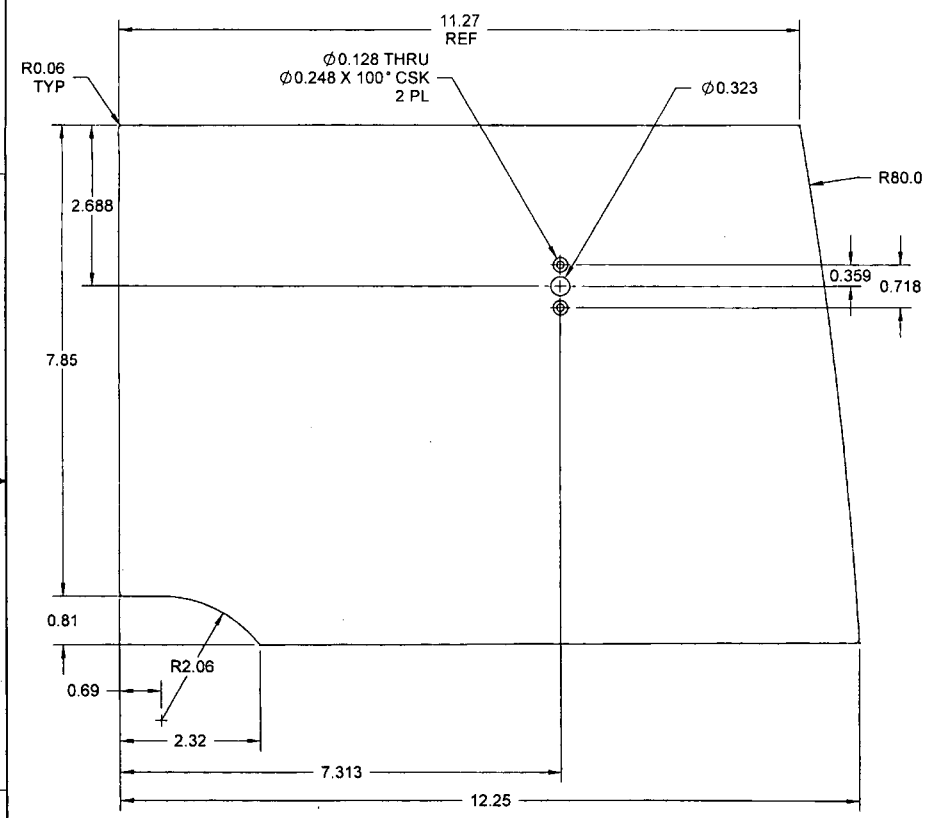

D3594-3 FLOOR DOUBLER

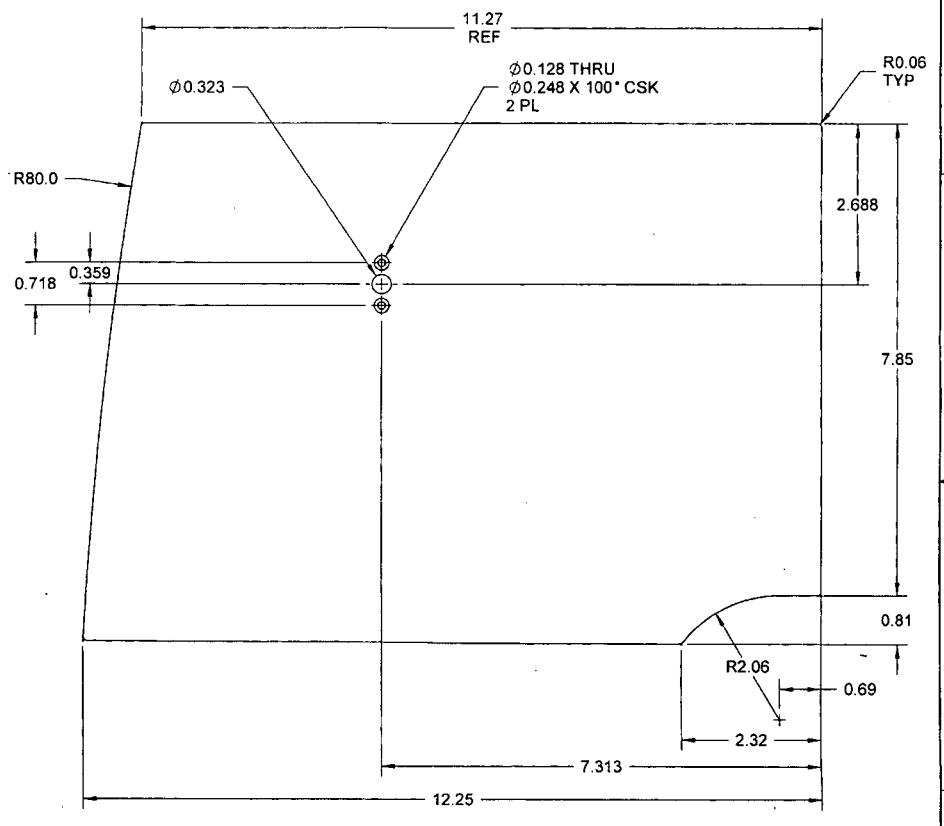

D3594-4 FLOOR DOUBLER

RELEASED
08.05.26

w/o 64086

DESIGN	AJS	DART AEROSPACE LTD HAWKESBURY, ONTARIO, CANADA
DRAWN	MB	
CHECKED		DRAWING NO. D3594 REV. B
MFG. APPR.		SHEET 4 OF 4
APPROVED		TITLE DOOR DOUBLER ASSEMBLY SCALE NTS
DE APPR.		
DATE	08.05.14	

COPYRIGHT © 2007 BY DART AEROSPACE LTD
THIS DOCUMENT IS PRIVATE AND CONFIDENTIAL AND IS SUPPLIED ON THE EXPRESS CONDITION THAT IT IS NOT TO BE USED FOR ANY PURPOSE OR COPIED OR COMMUNICATED TO ANY OTHER PERSON WITHOUT WRITTEN PERMISSION FROM DART AEROSPACE LTD.